POWER DISTRIBUTION BOARD

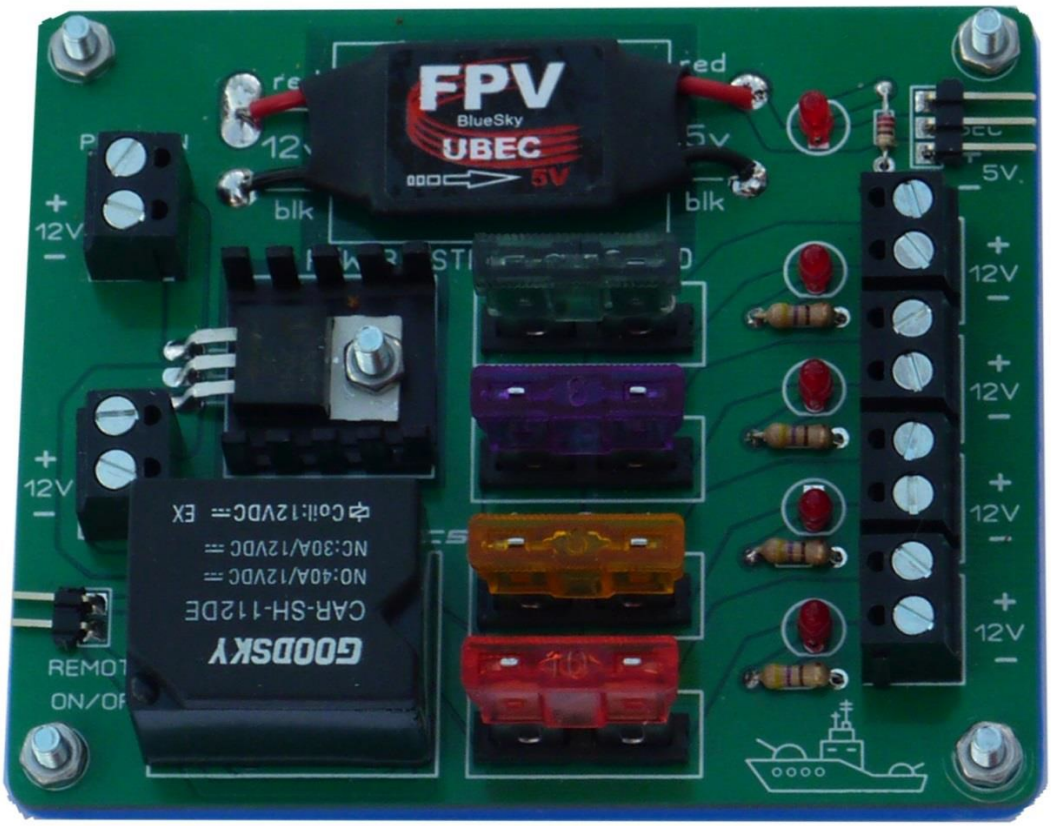

Exclusively available from:-

Scale Warship
5 Beechwood Avenue
New Milton
Hants
BH25 5NB

07855 941117

john@scalewarship.com

OVERVIEW

Designed specifically for ScaleWarship, this board is a neat and convenient way to connect up and distribute battery power in model boats, especially where a number of additional electronics accessories are fitted. *Its use is however limited to 12v battery systems – a consequence of the automotive relay used to isolate the battery/batteries.*

The main features are as follows:-

- **Four separately fused outputs**
  Connection is made by 16A screw terminal blocks. Each output is separately fused using standard automotive fuses and has an LED indicator to show that the output is active – an unlit LED indicates a fuse failure – assuming the unit is switched on of course.

  The 12v outputs should be split between the various functions and be fused accordingly to afford maximum protection. Thus for example a 10A fused output might supply the motor, a 5A fused output might supply the bow thruster, a 1A fused output might supply the (RC switched) lighting circuits and another 2A output might supply the sound system. In twin motored boats, feeding each one from a separate fused output means that in the event of an overload (eg weed round one prop) when the fuse blows the boat may still be able to be recovered with the remaining working motor.

  The maximum current that can be supplied is limited by the 30A rating of the relay so the user should choose fuse values for the various outputs whose overall sum does not exceed 30A. As a guide, users should fit fuses the next size up from the normal *operating* current of the load such that switch-on or operating surges don't cause nuisance fuse blowing whilst still affording the best protection. Note that the *carrying* capacity of a relay is generally considerably greater than its *switching* capacity.

- **5v 3A UBEC (Universal Battery Eliminator Circuit)**
  A commercially available unit is used which drops the 12v supply down to 5v for feeding the receiver and servos and any other accessories requiring a 5v supply. It is a switching type so unlike linear regulators it does not waste power in the form of burning off the excess voltage. It operates much like a speed controller except the average output voltage of the 12v PWM stream is smoothed by and inductor and capacitor rather than the mechanical inertia of the motor. An LED indicator shows the output is active.

  This (U)BEC function may be duplicated by the ESC or indeed by multiple ESCs elsewhere in the model. *There can only be one BEC in a model – connecting slightly different 5v sources (a result of manufacturing tolerances) will result in them 'fighting' each other, possibly to the death*.

At 3A capability, the distribution board's UBEC is likely to be rather more powerful than those BECs hosted by ESCs so if you choose to use the former, remove the 5v (red) wired contact(s) from the ESC(s) connectors and tape them back – then use the supplied male/male servo cable to connect the UBEC output to the receiver's battery socket.

The 5v supply is not fused as the UBEC is short circuit protected and will shut down in the event of a thermal overload (re-entrant when it cools)

- **Provision to (safely) parallel two batteries**
  As boats often need ballast then fitting an extra battery can solve that problem whilst at the same time increasing the running duration of the boat. As described above with the case of paralleling two or more BECs, paralleling main batteries of slightly different voltages can cause even higher and more dangerous balancing currents to flow (you may remember that before sophisticated engine management systems, it used to be the case that your car's tickover dropped significantly when you connected the 'dead' battery of a car you were trying to jump-start ?)

  The power distribution board uses a 20A dual Schottky* diode pair to solve this problem. A diode is inserted into each positive battery feed and the two outputs are commoned resulting in a 'auctioneer' function – the highest voltage bid wins and feeds the load, the lower voltage battery being protected by its diode being reverse biased (ie blocking) in this situation. As the voltages equalise then second battery cuts in and they share the load.
  ∗ Schottky diodes have about half the voltage drop of regular silicon diodes

  Connection is made by two 16A screw terminal blocks.

- **Reverse Polarity Protection**
  This is automatically provided by the inclusion of the Schottky diodes. However, you should note that if using two batteries, the distribution board will still work if one of the two batteries is reverse connected but the expected increase in running duration will not occur.

- **Relay switched main power**
  The four fused power outputs and the 5v BEC module are all connected to the main battery/batteries by a 30A 12v Automotive grade relay such that a miniature low current switch can be used to isolate the boat's electrics – this switch (which operates the relay's 12v coil) can be sited in some convenient concealed and attached to board by thin flying leads.

  You should note that the small on/off switches supplied with some ESCs do not actually isolate the main battery supply, they merely kill the integral BEC which results in the boat *appearing* to be OFF – this is much like leaving a loaded, cocked revolver in your desk drawer – there's no reason for it to go off, but you just wouldn't do it. Note that a revolver is less likely to be affected by a sparking central heating thermostat or an unsuppressed motorbike driving by! This is another reason to consider using the distribution board.

CONNECTIONS

The main 12v power inputs and outputs are made using 16A screw terminal blocks. The two inputs are shown on the left hand side of the diagram below and the four outputs are on the right hand side. The + and – terminals for these outputs are clearly marked by silk screened legends on the PCB.

It should be noted that the lower 12v output connectors have slightly shorter copper track runs from the relay to their connectors so to minimise possible voltage drop losses they should be preferably used for the higher current outputs. However in practice the fuses will cause the major losses.

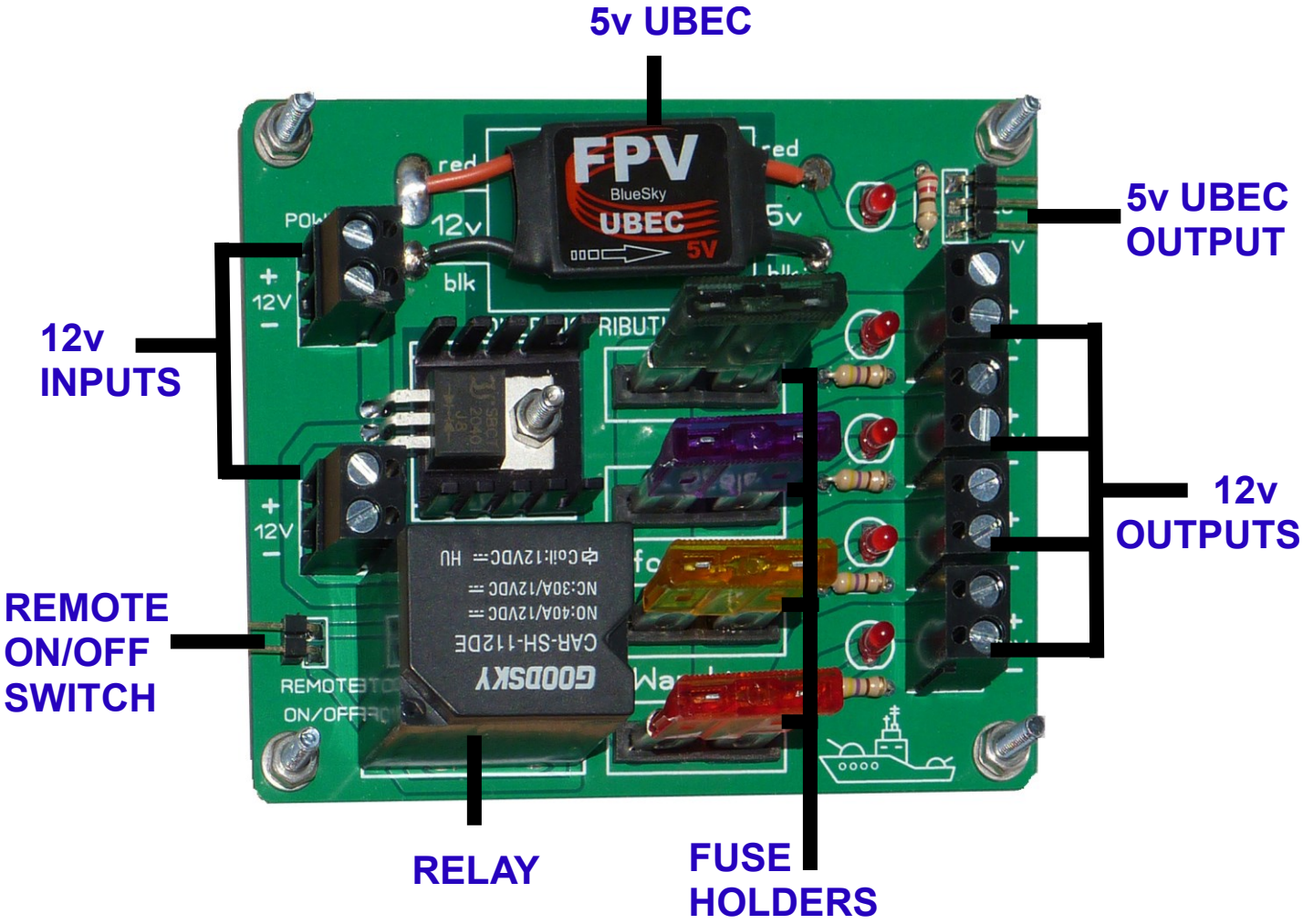

The remote on/off switch connector (a 2 pin header) is at the bottom left hand edge of the board and again clearly marked. A two pin JST lead is supplied for this purpose – though coloured red/black there are no polarity issues to be observed.

The 5v output connector (a 3 pin header) is at the top right hand edge of the board and the connection polarity is shown on the board. A three pin male/male servo lead is supplied such that the unit may be connected to power the RC receiver and rudder servo.

Be sure to have read and understood the earlier note warning about the dangers of having multiple 5v BECs in the system – and how to mitigate that.